HTR2008789 2.126 Kg/m

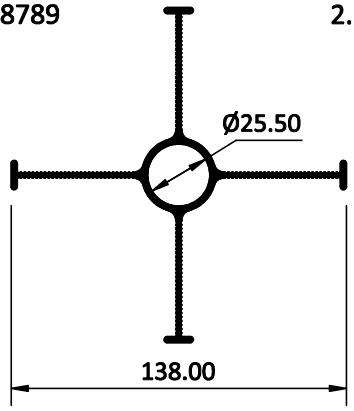

HTR2008790 3.768 Kg/m

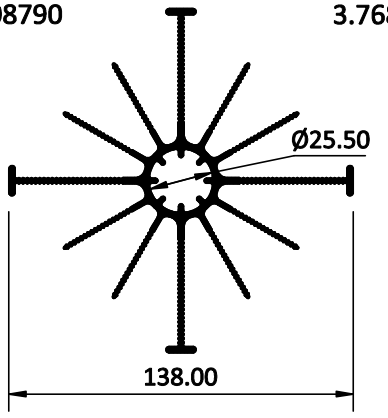

HTR2008822 3.987 Kg/m

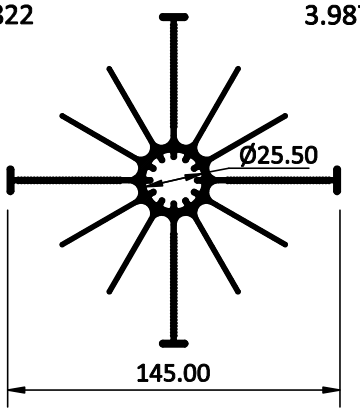

HTR2008823 2.407 Kg/m

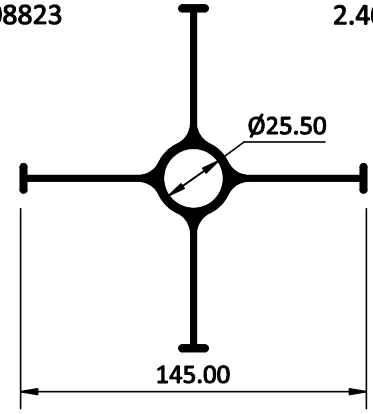

HTR2008824 3.210 Kg/m

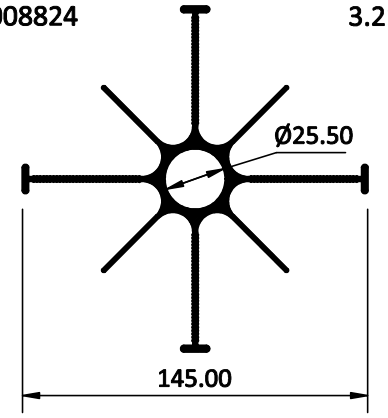

HTR3008886 3.756 Kg/m

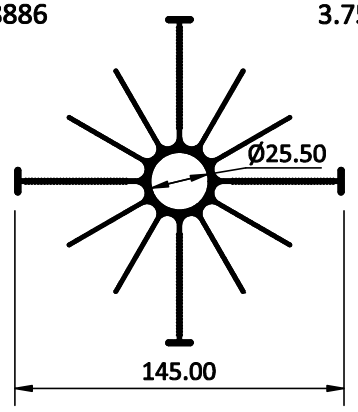

HTR3060522 3.630 Kg/m

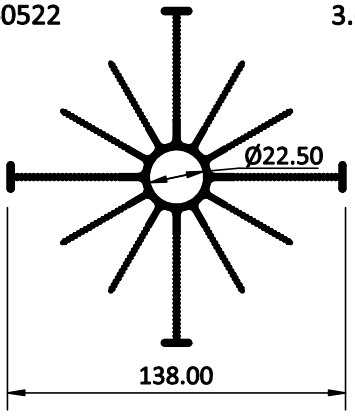

HTR3060538 2.668 Kg/m

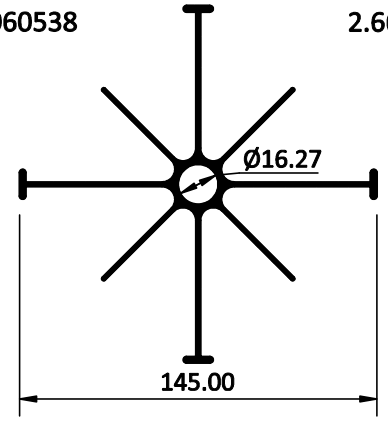

HTR2008752 1.548 Kg/m

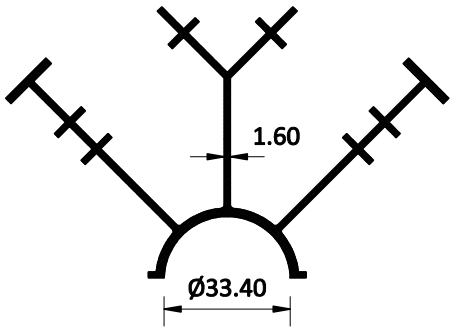

HTR2008853 1.506 Kg/m

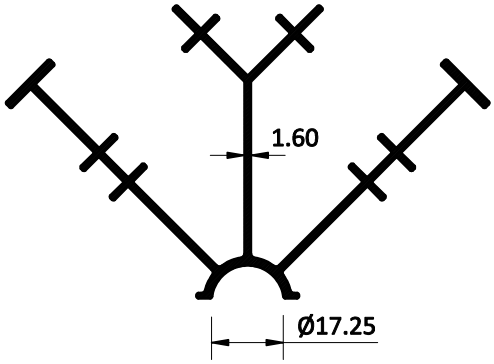

HTR2008821 1.521 Kg/m

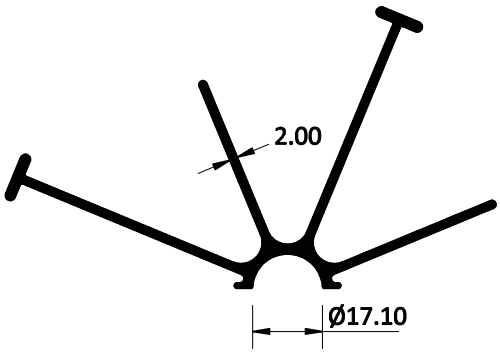

HTR2008854 1.526 Kg/m

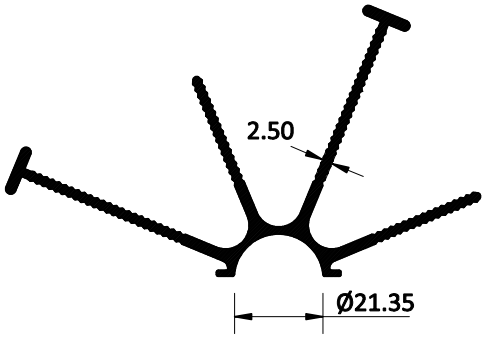

HTR2005489 2.533 Kg/m

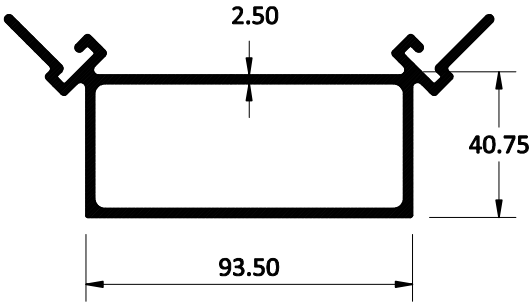

HTR2008746 2.432 Kg/m

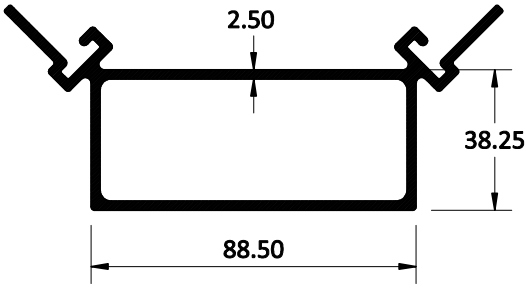

HTR2005688 3.382 Kg/m

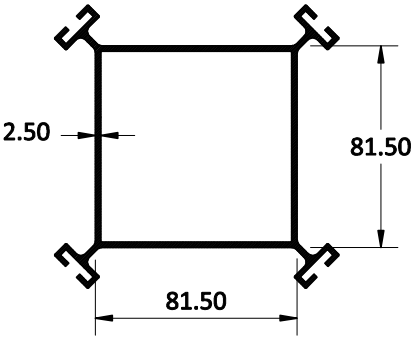

HTR2005490 3.471 Kg/m

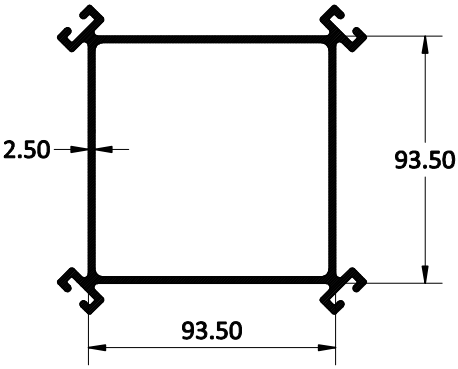

HTR3008745 3.337 Kg/m

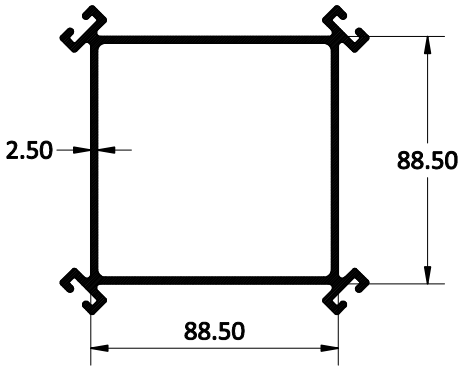

HTR2060572 1.394 Kg/m

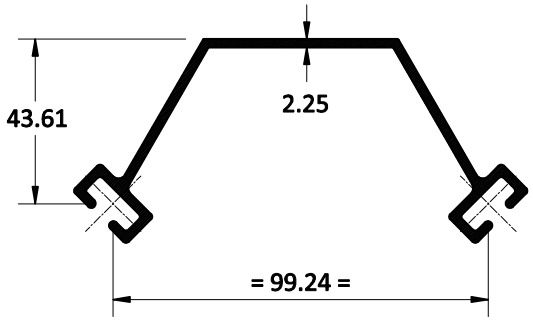

HTR3060537 3.559 Kg/m

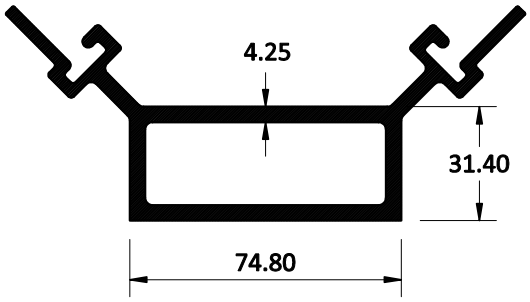

HTR3060539 1.164 Kg/m

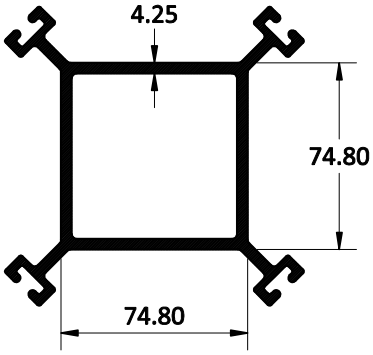

HTR3060550 2.273 Kg/m

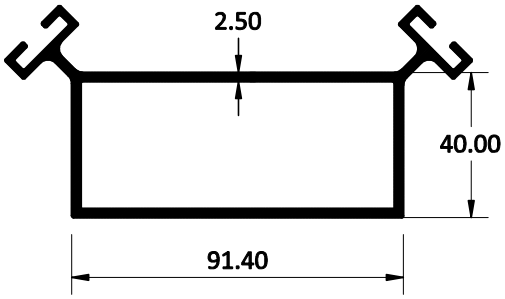

HTR3060548 7.013 Kg/m

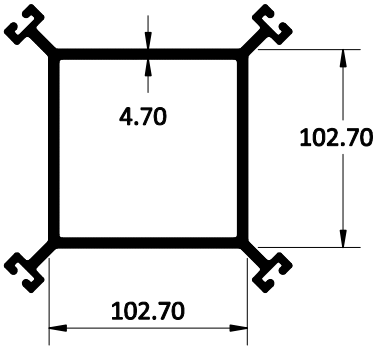

HTR3060547 2.525 Kg/m

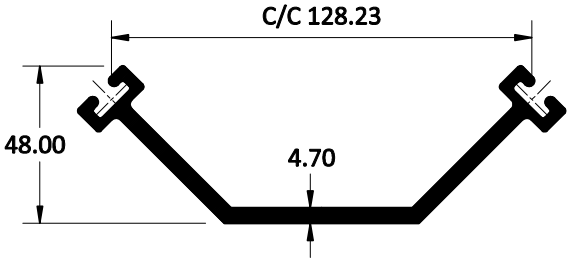

HTR2060583 2.519 Kg/m

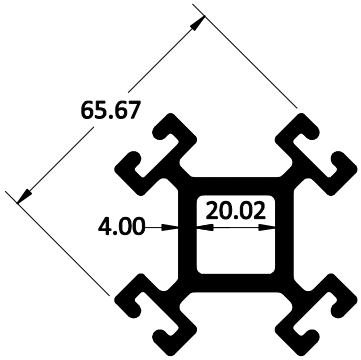

HTR1060584 0.991 Kg/m

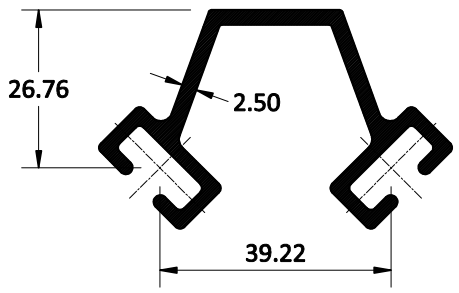

HTR2060586 1.335 Kg/m

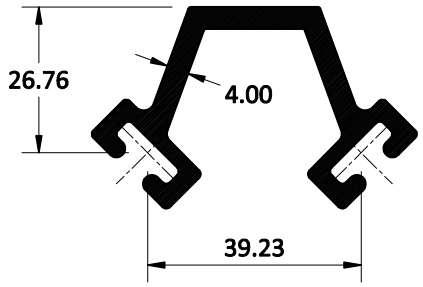

HTR3060571 3.281 Kg/m

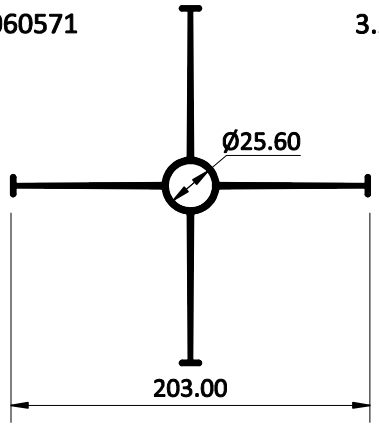

HTR308873 4.896 Kg/m

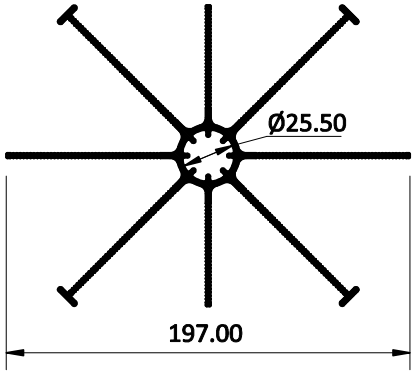

HTR3060585 5.270 Kg/m

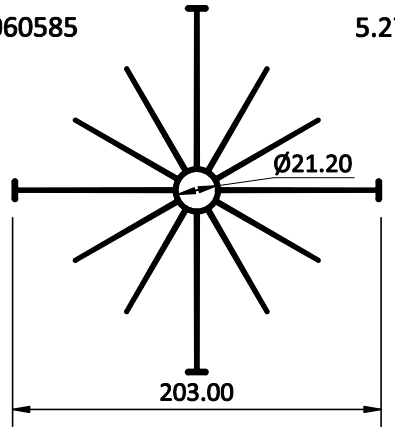

HTR3060587 5.375 Kg/m

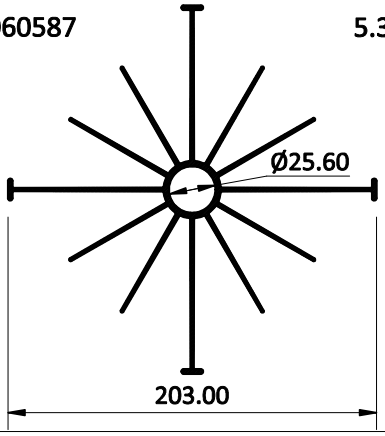

HTR3060549 5.556 Kg/m

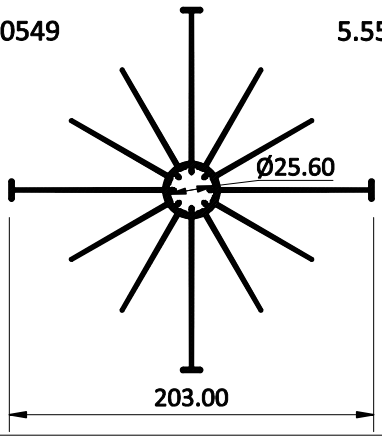

HTR3008867 4.250 Kg/m

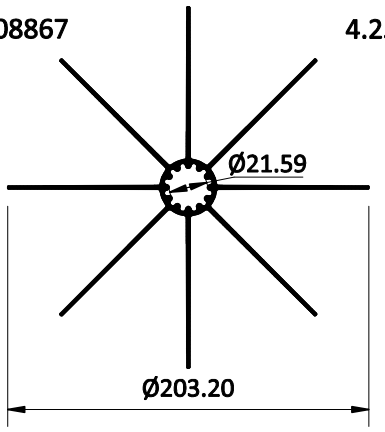

HTR2060555 2.411 Kg/m

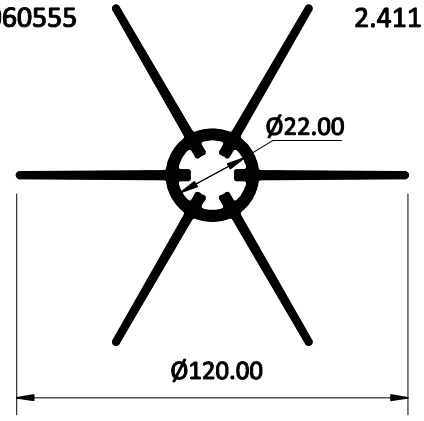

HTR3008872 4.104 Kg/m

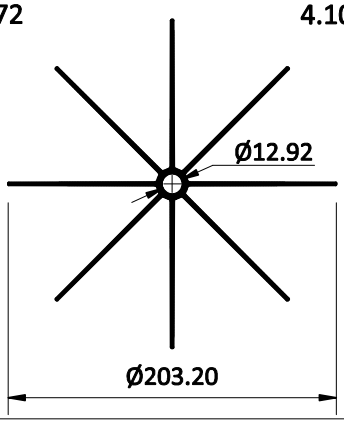

HTR2003654 3.019 Kg/m

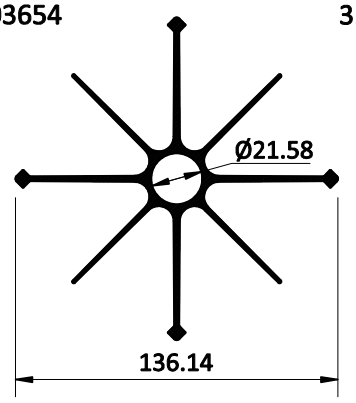

HTR3060506 3.226 Kg/m

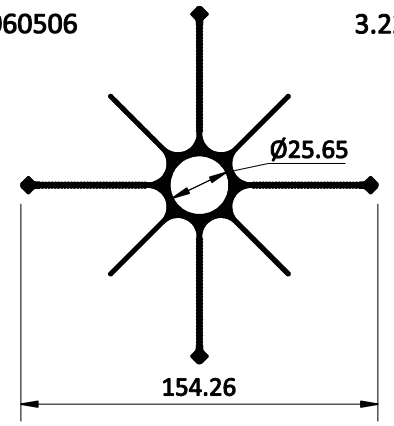

HTR3060545 3.068 Kg/m

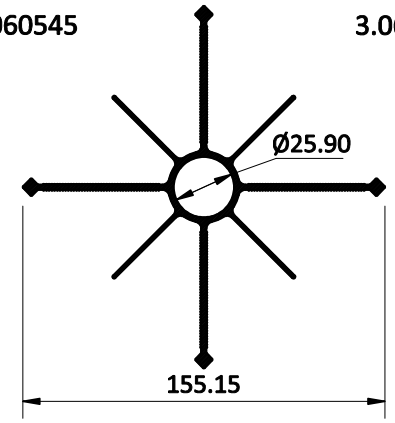

HTR3060554 3.100 Kg/m

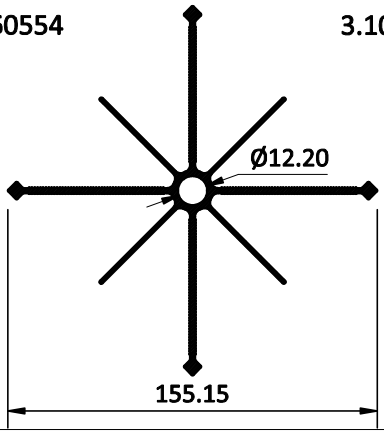

HTR3008817/L 5.955 Kg/m

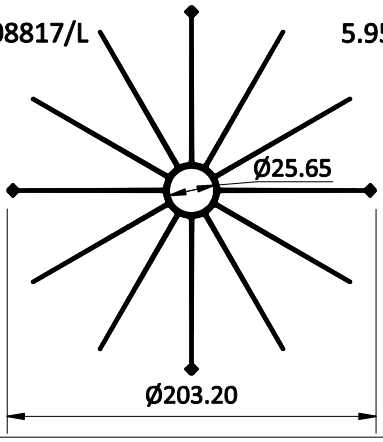

HTR3008860 4.216 Kg/m

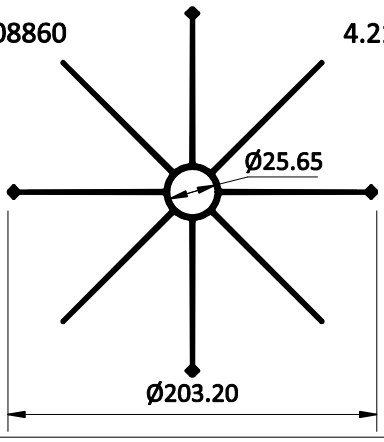

HTR3008862 4.231 Kg/m

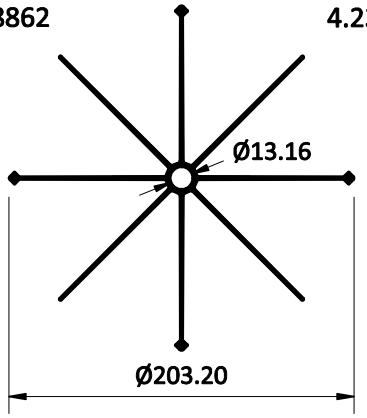

HTR3008801 3.141 Kg/m

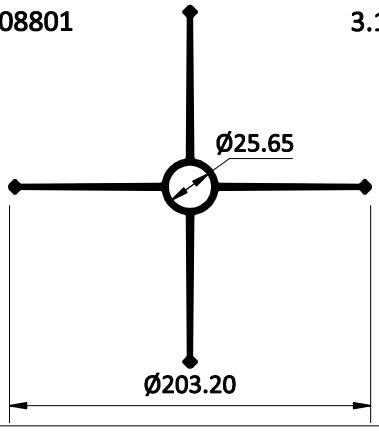

HTR3060502 3.869 Kg/m

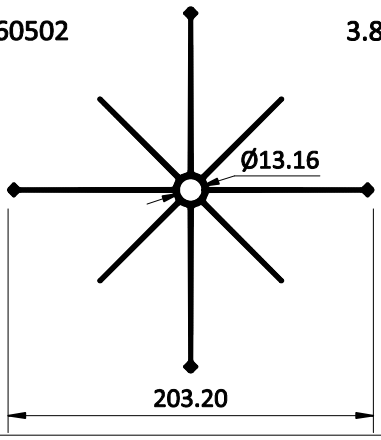

HTR3060503 3.141 Kg/m

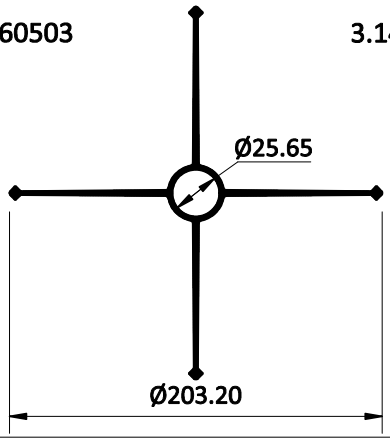

HTR3060504 3.938 Kg/m

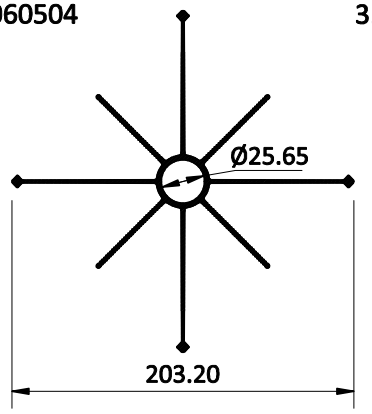

HTR3060510 2.696 Kg/m

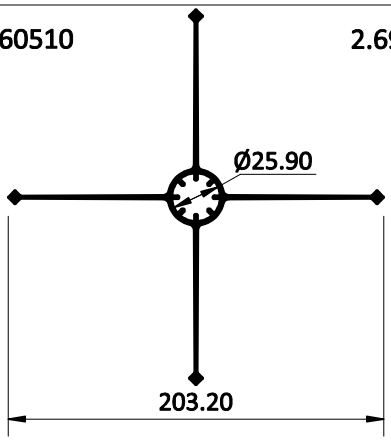

HTR3060597 5.593 Kg/m

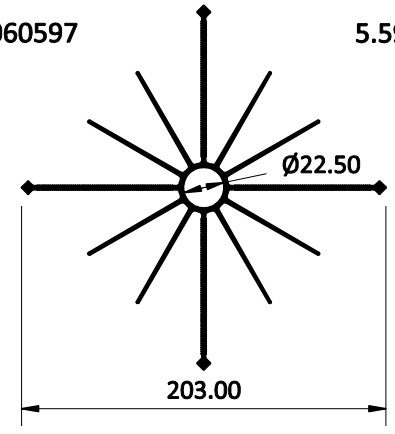

HTR3060598 2.527 Kg/m

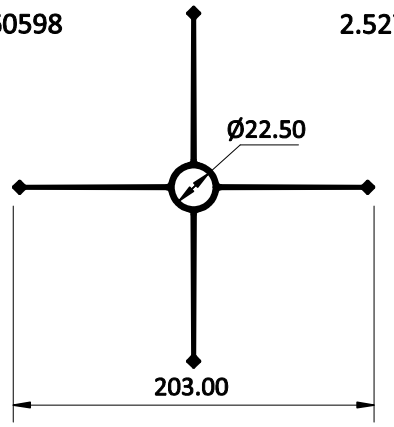

HTR3060511 5.701 Kg/m

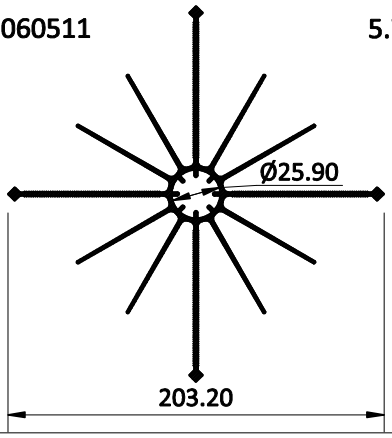

HTR3060505 5.265 Kg/m

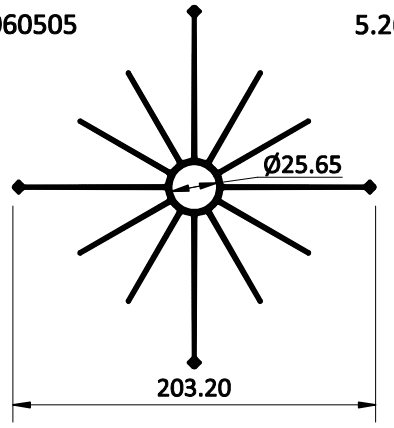

HTR2008792 0.793 Kg/m

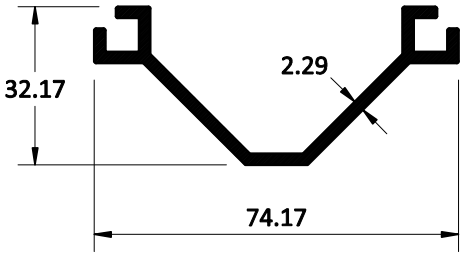

HTR3060588 5.888 Kg/m

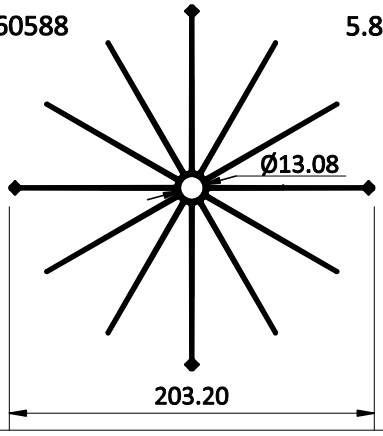

HTR3008791 3.819 Kg/m

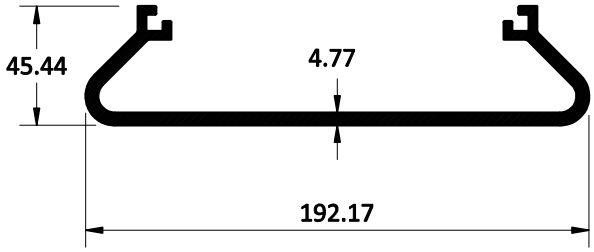

HTR2008761 2.540 Kg/m

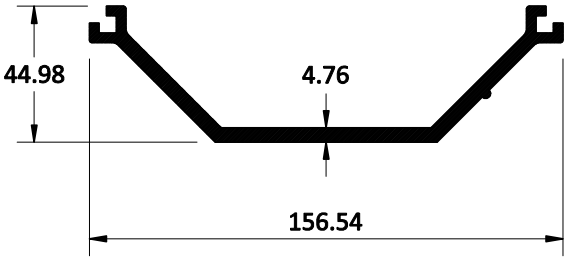

HTR3008793 2.918 Kg/m

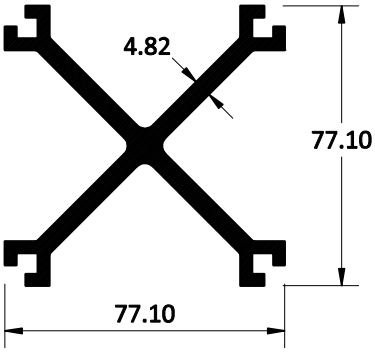

HTR2008762 4.050 Kg/m

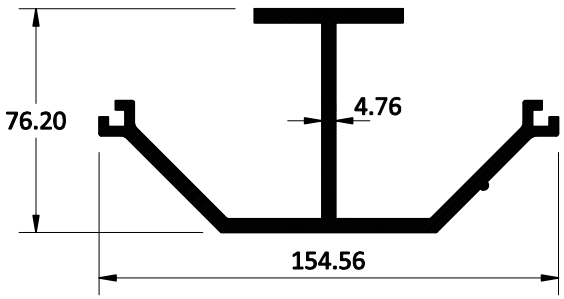

HTR2008858 1.927 Kg/m

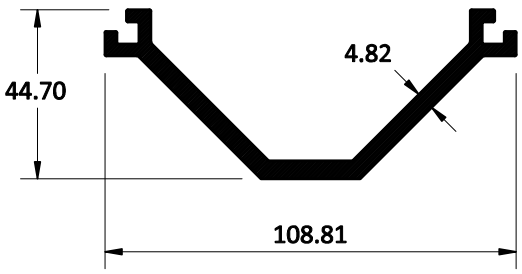

HTR2060599 1.879 Kg/m

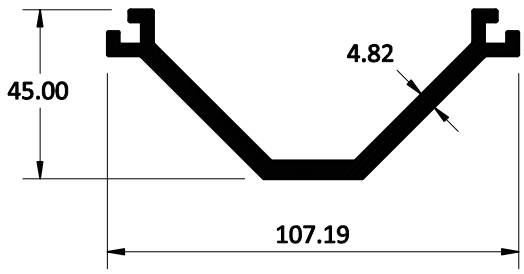

HTR2008859 4.935 Kg/m

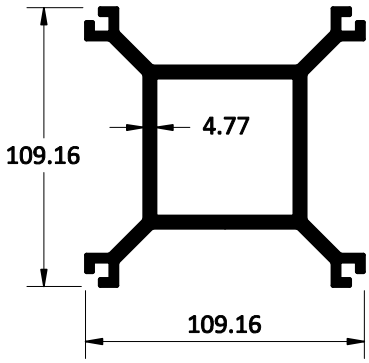

HTR3008871 7.382 Kg/m

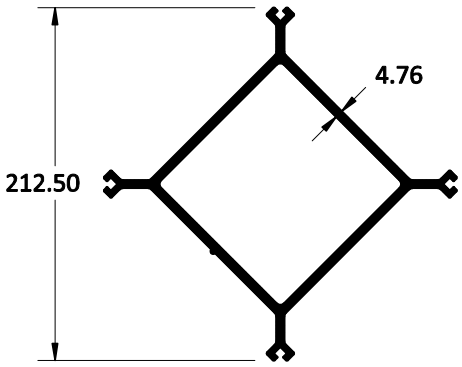

HTR3060507 3.013 Kg/m

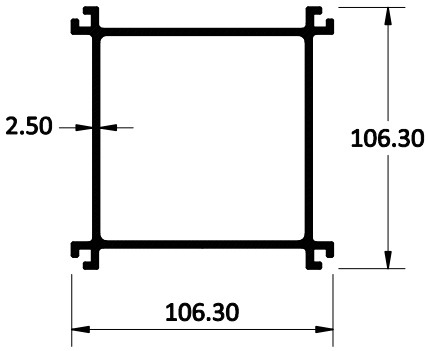

HTR3060508 2.682 Kg/m

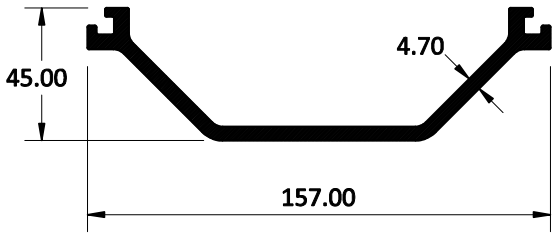

HTR3060509 3.665 Kg/m

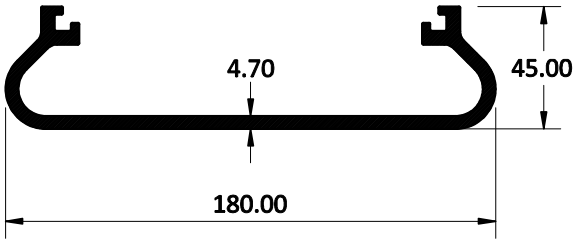

SPS2008111 1.808 Kg/m

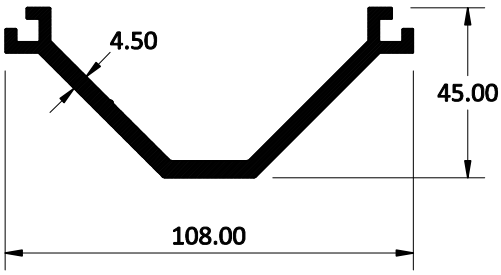
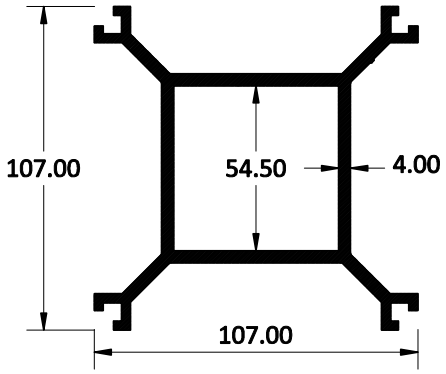
SPS2008112 4.089 Kg/m